Welcome to the AccessibilityOnline Webinar Series

A collaborative program between the National Network of ADA Centers and the US Access Board

The Session is Scheduled to begin at 2:30pm Eastern Time

We will be testing sound quality periodically

The content and materials of this training are property of the US Access Board and the DBTAC - Great Lakes ADA Center and cannot be used and/or distributed without permission. This program is funded under award #H133A060097 from the U.S. Department of Education through the auspices of the National Institute on Disability and Rehabilitation Research (NIDRR) and an inter-agency agreement with the U.S. Access Board. For permission to use training content or obtain copies of materials used as part of this program please contact us by email at adata@adagreatlakes.org or toll free (877)232-1990 (V/TTY)

www.AccessibilityOnline.org (877) 232-1990(V/TTY)

Presenters

U.S. Access Board



Scott Windley



Dave Yanchulis

2

Accessible Doors

Session Agenda

- Where required
- Manual Doors
- Automated Doors
- Questions

3

New ADA Standards

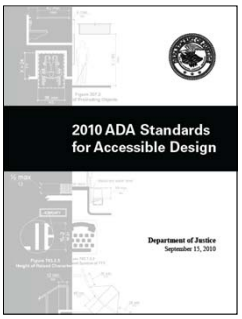

DOJ's 2010 standards

(mandatory March 15, 2012)



Based on the Board's ADA-ABA Guidelines (2004)

4

ADA and ABA Standards

ADA :

- DOJ's standards (2010)
- DOT's standards (2006) for transit facilities

ABA (Federal Sector):

- ABA standards updated (GSA, DOD, USPS)
- Update of HUD standards still pending
- (UFAS still applies to housing covered by ABA)

5

Door & Entrance Scoping

Section 206 (Accessible Routes)



p. 55



p. 23

TABLE OF CONTENTS

ADA CHAPTER 1: APPLICATION AND ADMINISTRATION	5
101 Purpose	5
102 Dimensions for Adults and Children	5
103 Equivalent Facilitation	5
104 Conventions	5
105 Referenced Standards	8
106 Definitions	12
ADA CHAPTER 2: SCOPING REQUIREMENTS	18
201 Application	18
202 Existing Buildings and Facilities	18
203 General Exceptions	21
204 Protruding Objects	22
205 Operable Parts	23
206 Accessible Routes	23
207 Accessible Means of Egress	32
208 Parking Spaces	33
209 Passenger Loading Zones and Bus Stops	35
210 Stairways	36
211 Drinking Fountains	36
212 Kitchens, Kitchenettes, and Sinks	37
213 Toilet Facilities and Bathing Facilities	37
214 Washing Machines and Clothes Dryers	38
215 Fire Alarm Systems	39
216 Signs	39
217 Telephones	42

6

Doors Scoping (206.5)

- Covers doors providing user passage at:
- required accessible entrances
- accessible rooms/spaces (at least 1)
- along accessible routes & MOE

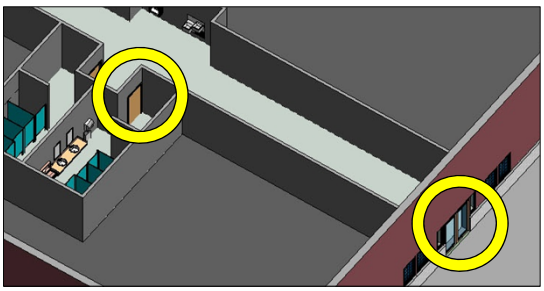

7

Doors Scoping (206.5)

- Additional requirements:



- Transient Lodging: <u>all</u> guest rooms must have doors meeting 32” clear width
- Dwelling Units: <u>all</u> doors in accessible units must comply



8

Entrances (206.4)

- At least 60% of public entrances must comply
- Public entrance = any entrance that is not a service or restricted entrance

9

Entrances

- In addition to the 60% requirement:
- direct access from parking structures (all)
- direct access from tunnels or elevated walkways
- different fixed routes in transit facilities
- entrances to each tenant space
- restricted entrance (at least 1)
- secured entrance (at least 1)



10

Secured Entrances (404.1)

- **Doors operated only by security personnel exempt from provisions for:**
  - **Hardware (404.2.7)**
  - **Closing speed (404.2.8)**
  - **Opening force (404.2.9)**



- **(automated doors subject to clear width & threshold requirements only)**

11

Rooms & Spaces

- All rooms/spaces must comply in new construction unless exempted/ partially scoped
- Exceptions:
  - areas raised for security, life/fire safety
  - machinery/ equipment spaces
  - certain single occupant structures
  - other spaces listed in 203 (General Exceptions)

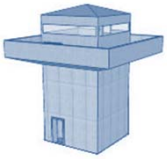

12

Rooms & Spaces

- Work Areas (203.9):
- Entry doors/ gates must comply (most other requirements do not apply in the ADA standards)



13

Stairwells

- Doors on accessible route/ MOE must comply
- (e.g., route to area of refuge or emergency exit in stairwell)



14

Doors Covered (404)

- Manual: swing, sliding, folding (404.2)
- Automated: full powered and low energy/ power assisted (404.3)
- Gates also covered by 404
- Revolving doors (including automated) can't serve as accessible door



15

Manual Doors

16

Clear Width (404.2.3)

32” min. measured from stop to face of door open 90°

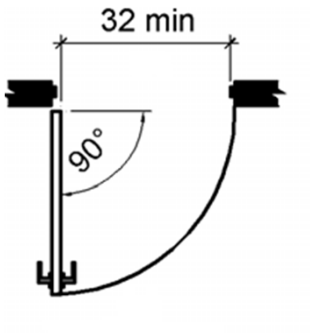

alterations: 5/8” max. projection into latch side stop allowed

17

Clear Width

32” min. clear width: sliding and folding doors

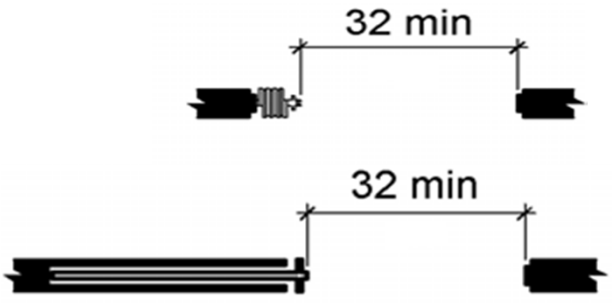

18

Clear Width

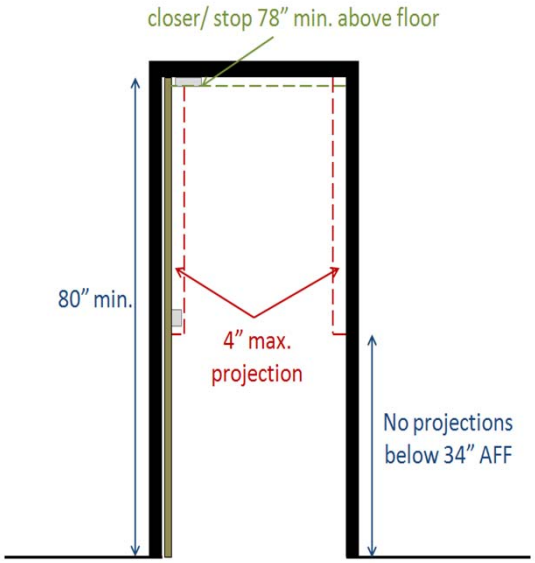

Limited projections into door clear width

19

Clear Width

36" min. clear width required if opening more than 24" deep

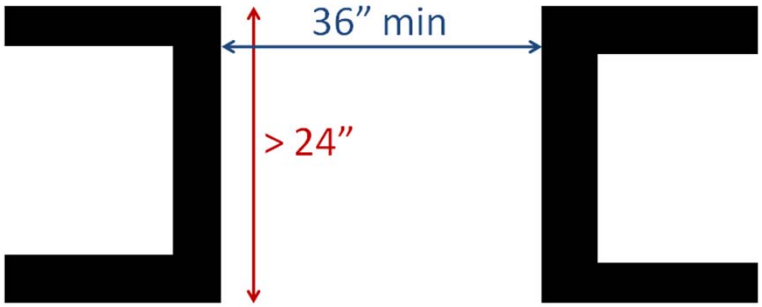

20

Maneuvering Clearances (404.2.4)

- **Minimum space for positioning/ maneuvering at doors**





21

Maneuvering Clearances

- **Accommodates all types of mobility aids**



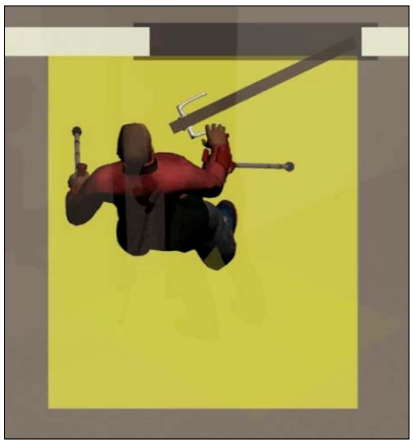

22

Maneuvering Clearances

Forward Approach

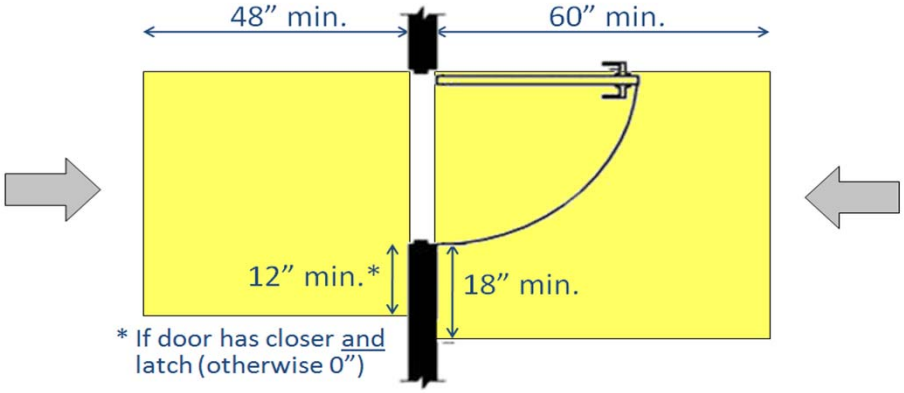

23

Maneuvering Clearances

- **Forward, latch-side, hinge-side approaches**

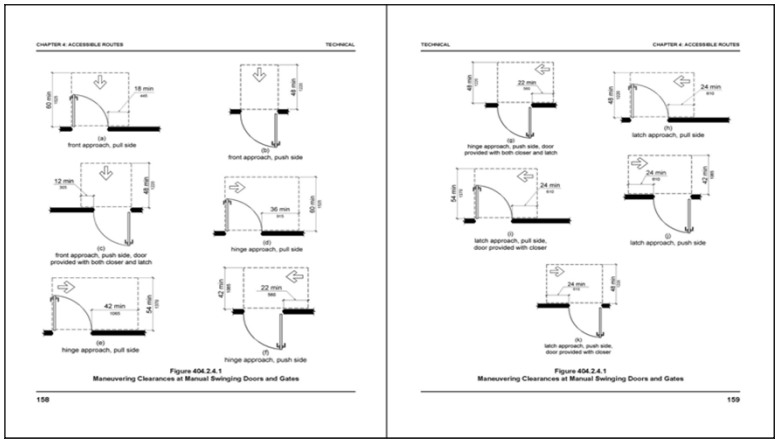

Figure 404.2.4.1
Maneuvering Clearances at Manual Swinging Doors and Gates

24

Maneuvering Clearances

If space is at least 60” deep, a forward approach can be provided (instead of side)

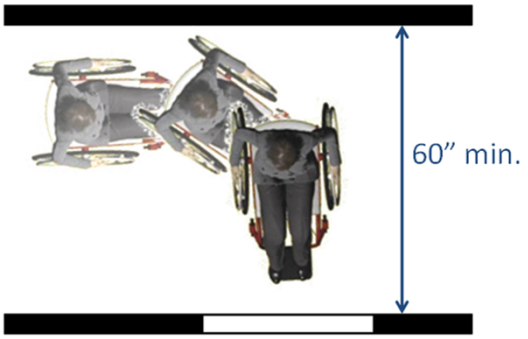

25

Maneuvering Clearances

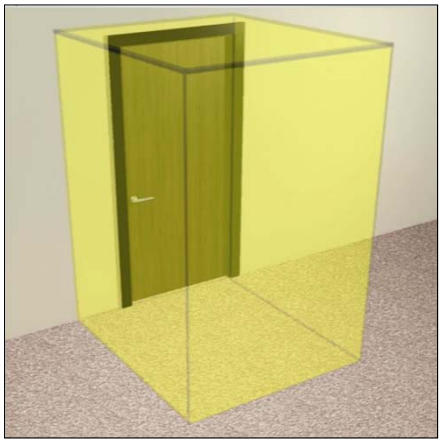

- **clearance applies to full height (80” min.)**
- **No changes in level (other than thresholds)**

26

Maneuvering Clearances

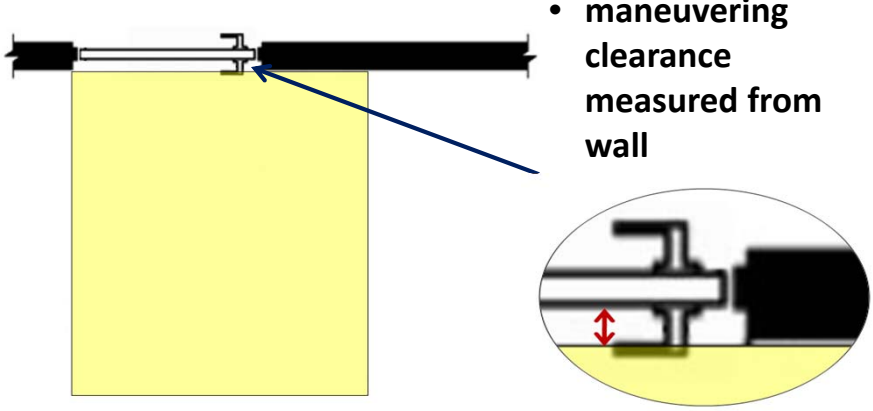

- maneuvering clearance measured from wall

Max. offset from face of door: 8”

27

Maneuvering Clearances

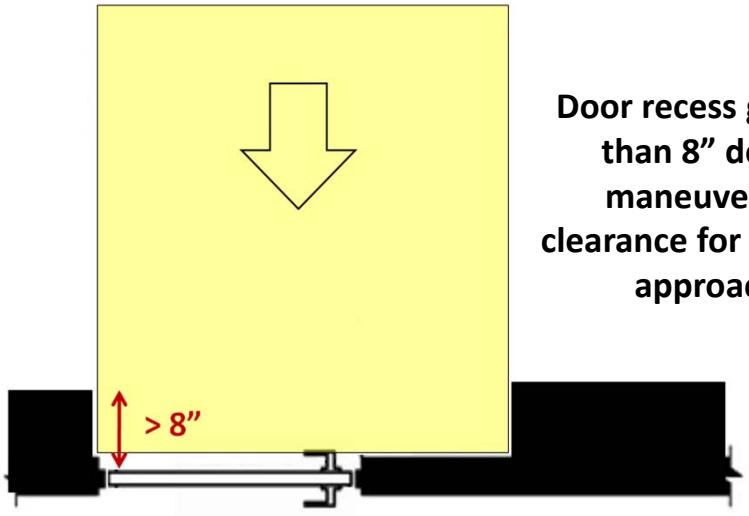

Door recess greater than 8” deep: maneuvering clearance for forward approach

28

Maneuvering Clearances





Recess: 8” max.

Recess: greater than 8”

29

Maneuvering Clearances



Hospital Patient Rooms:
latch side clearance not required at entry doors
(404.2.4, exception)

30

Maneuvering Clearances

Landings must accommodate maneuvering clearance
Tip: **Locate maneuvering clearance away from stair openings/ drop-offs**

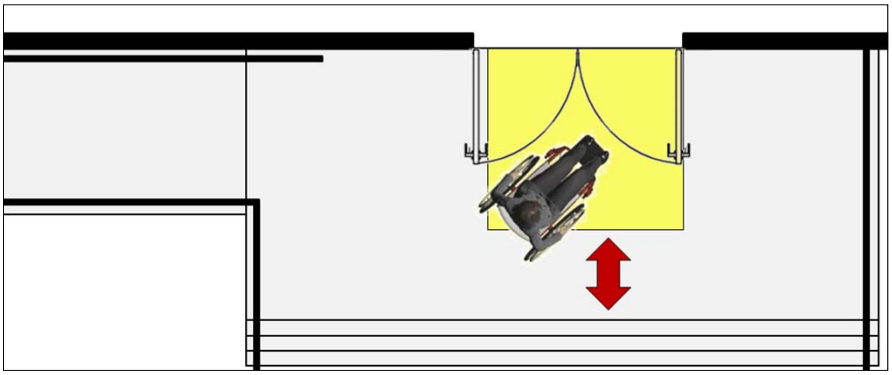

31

Landings

Maneuvering clearance and ramp landings can overlap
Tip: **Locate doors outside ramp landings to prevent hazards**

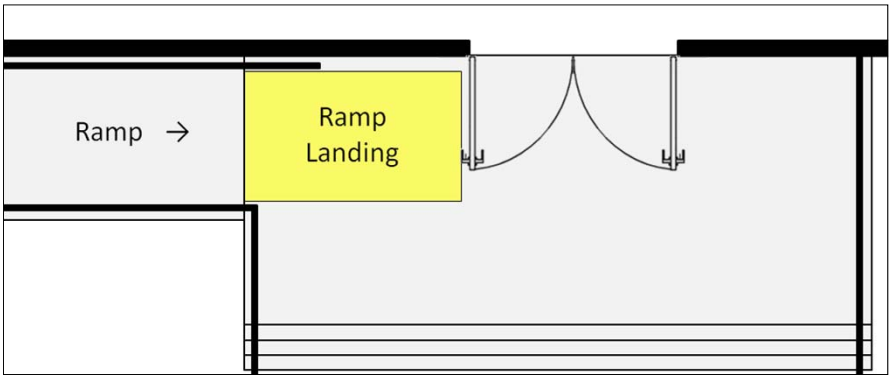

32

Thresholds (404.2.5)

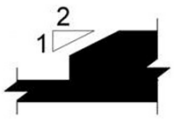

½” max. (beveled)
¼” max. (vertical)



Existing/altered: ¾” (beveled) allowed

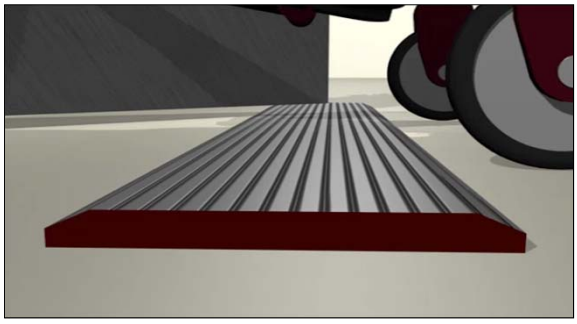

33

Doors in Series (404.2.6)

48” min. separation between swing of doors



34

Doors in Series

Requirement applies in all cases same direction, in-swinging, out-swinging)

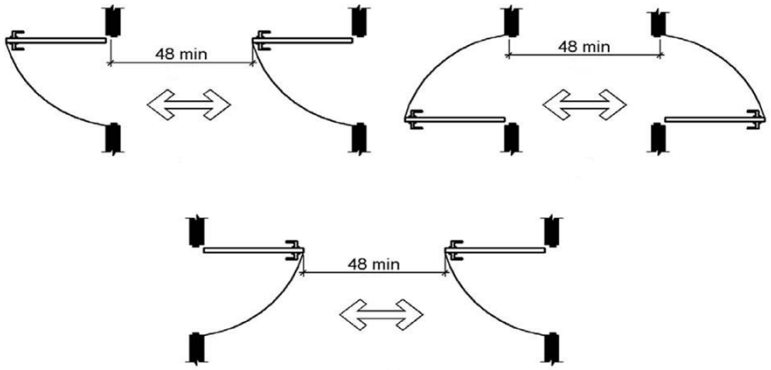

35

Vestibules

Tip: **Wheelchair space beyond door swing is advisable in other types of vestibules**



36

Vestibules

Door maneuvering clearances can overlap

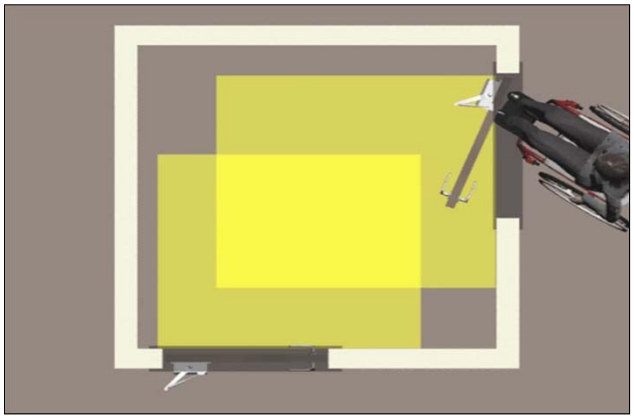

37

Toilet/Bath/Dressing Rooms

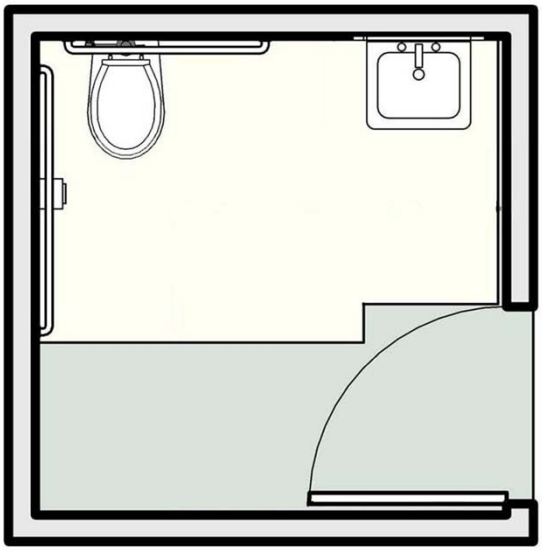

Door cannot swing into toilet/bathroom fixture clearances or into dressing rooms unless …

38

Toilet/Bath/Dressing Rooms

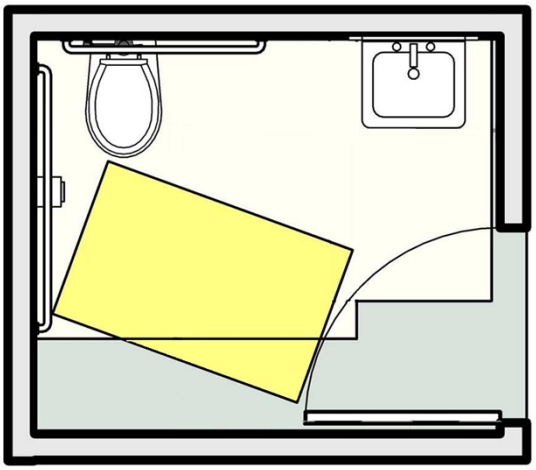

… unobstructed wheelchair space (30”x 48”) is provided beyond door swing

39

Toilet Stall Doors (604.8)

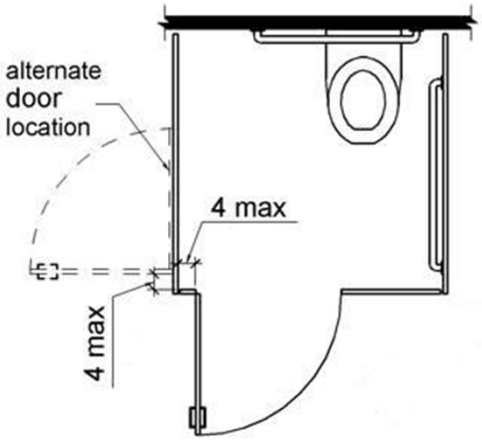

- Self-closing
- Door pull (both sides)
- Can’t swing into minimum stall area
- Location

40

Toilet Stall Doors

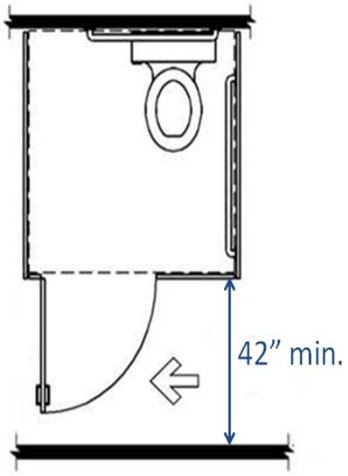

Must meet man. clearances

(42” min. clearance allowed for latch side approaches)

41

Toilet Stall Doors

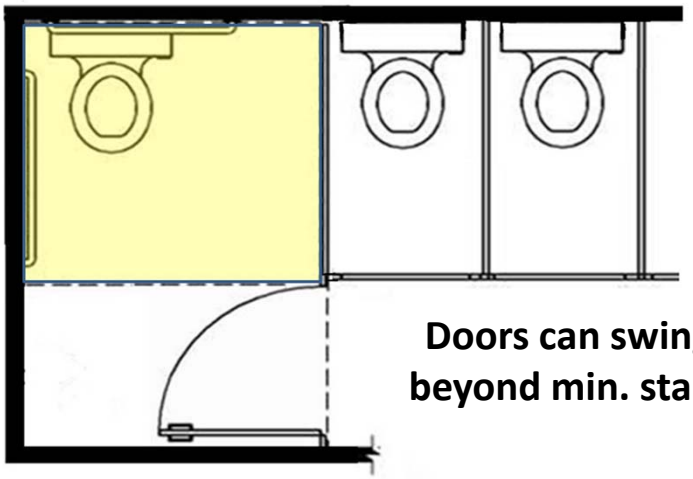

Doors can swing into stall beyond min. stall clearance

42

Hardware (404.2.7)

- 1 hand operation
- No tight grasping, pinching, twisting of wrist
- 5 lbf max. force
- Height: 34” – 48” AFF (exception for certain existing doors and gates at pools)



43

Hardware

Levers, pulls, and other types comply
Not compliant: rounded knobs





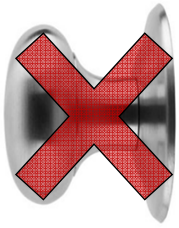

44

Hardware

Closed fist/ loose grip operability = good (but not required)



45

Closing Speed (404.2.8)

Door Closers

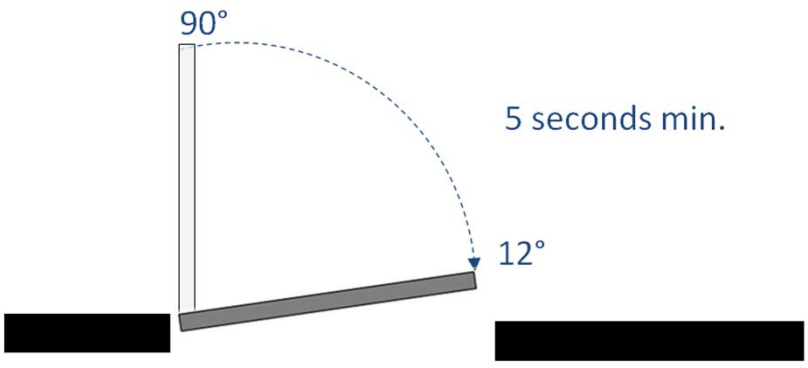

46

Closing Speed

Spring Hinges

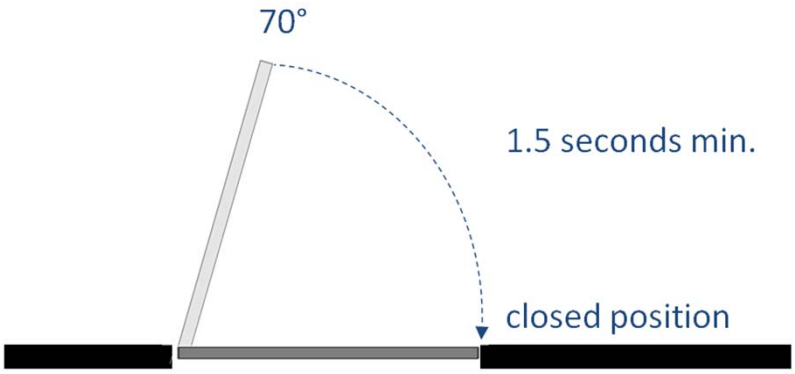

47

Opening Force (404.2.9)

5 lbf max.

Except:

- **Fire Doors (min. required by code)**
- **Exterior Hinged Doors (min. feasible)**

48

Opening Force

Exterior Doors: Automation Recommended



Required at GSA buildings
(Public Building Service Standards)

49

Opening Force

- **Applies to continuous opening force**

Does not apply to:

- **Initial force to overcome inertia of door**
- **Force to retract bolts/ disengage devices holding door in closed position**

50

Opening Force

Available devices for measuring opening force:

- **Door gauges**
- **Tensionometers**
- **Fish scale**



51

Door Surface (404.2.10)

Bottom 10” must be smooth (full width of door)



Kick plates can be used to protect door

52

Bottom Surface

Exceptions:

- **Sliding doors**
- **Some tempered glass doors without stiles**
- **Existing doors**
- **Doors not extending to 10” AFF**

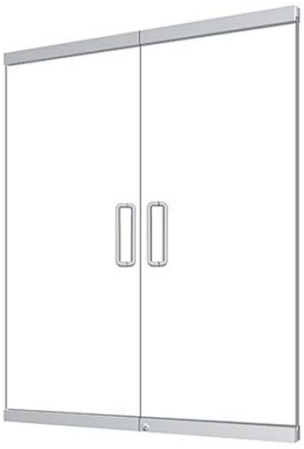

53

Vision Lights (404.2.11)

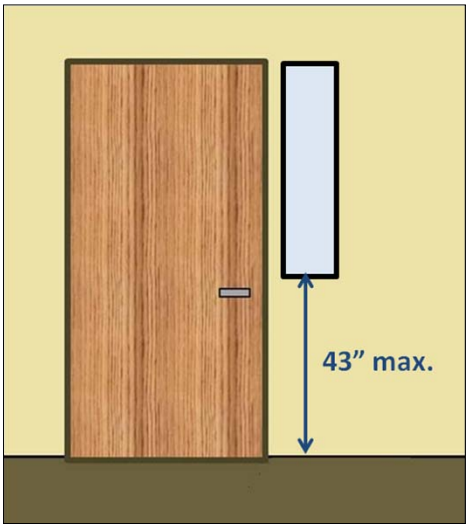

If provided, vision lights: 43” max. AFF

(not required if bottom edge is above 66”)

54

Other Requirements

55

Signs

Labels / directional signs (with ISA) required at entrances (when not all are accessible)



56

2-Way Communication Systems



Entrances: Communication devices must have both visual and audible signals

57

Notification Devices

Communication accessible **units only**

Transient Lodging (806.3.2):
- **Visible notification of door knock/bell**



Residential Dwelling Units (809.5.5):
- **Hard-wired doorbell – audible & visible**
- **Means to identify visitors without opening door (e.g., window/ vision panel, peephole, door scope, etc.)**



58

Peepholes

Tip: **Prisms/ lenses (door scopes) available that provide wide-angle view and are usable from standing and seated positions**



(standards do not address peephole height)

59

Security Barriers (206.8)

Alternative route permitted at security screen devices



60

Security Barriers

Security barriers (e.g., bollards) cannot obstruct accessible route to entrances



61

Automated Doors

62

Automatic and Power-Assisted Doors (404.3)

- Thresholds (same as manual doors)
- Doors in series (same as manual doors)
- Clear width
- Break Out Opening
- Controls
- Maneuvering Clearance
- ANSI/BHMA Standards (for safety and operation)



63

Clear Width (404.3.1)

- 32” minimum in power-on and power-off mode
- If both leaves open when activated the clear width is based on the opening provided by all leaves in the open position



64

Break Out Opening



Doors on MOE:

32” min. clear break out opening (emergency mode)

Unless:

- **Door has standby power**

or

- **Compliant manual door serves the same MOE**

65

Controls





Wheelchair space at controls must be outside the door swing

66

Controls

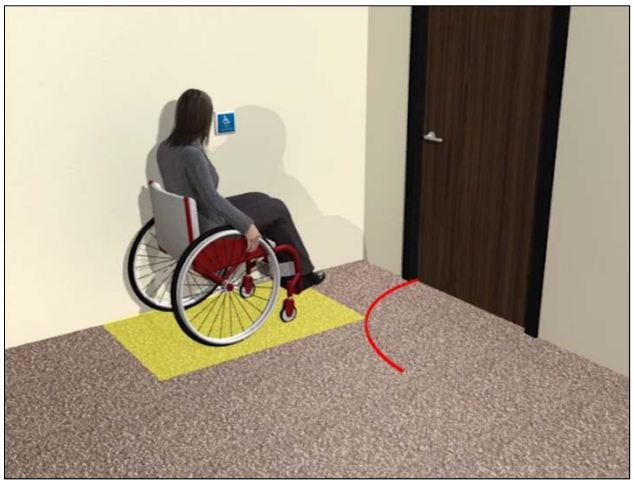

Control on adjacent wall/post can provide easier access

67

Maneuvering Clearance

Compliance with 404.2.4 required for:

- **Power-assisted doors**
- **Automatic doors on accessible MOE (except those with standby power or that stay open in power-off mode)**



68

Two BHMA/ANSI Standards



ANSI/BHMA A156.19

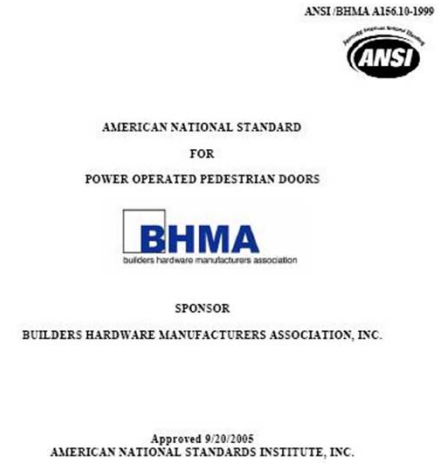

ANSI/BHMA A156.10

69

ANSI/BHMA

A156.10 Full-Powered Automatic Doors

- **Activated by mats or overhead sensors**
- **Do not require actuation**
- **Often provided at retail facilities, airports etc.**



70

ANSI/BHMA

A156.19 Low-Energy Power-Assisted Doors

- **Covers doors that function more like a standard hinged door but with a power closer/opener option**
- **Require actuation (e.g., push plate)**



71

ANSI/BHMA

Both referenced standards address:

- **Sensors or actuating devices**
- **How fast the door opens**
- **Safety features**
- **Sign requirements**
- **General performance**



72

Questions?

You may type and submit questions in the Chat Area Text Box or press Control-M and enter text in the Chat Area

73

U.S. Access Board

(800) 872-2253 (voice)

(800) 993-2822 (TTY)

E-mail: ta@access-board.gov

www.access-board.gov

74

Thank you for participating in today's webinar

Next scheduled session:

Accessible Hospitals and Other Health Care Facilities **(July 7th)**

www.accessibilityonline.org

(877) 232-1990 (v/TTY)

75