ELEDYNA™
GRIZZLY

Servo Control System for
SAFE-GLIDE™ Automatic-Door

GS 45A Sliding



GRIZZLY Smooth & Simple

High-efficiency Automatic Door

GS45A | GRIZZLY Sliding Door

Smooth & Simple, Grizzly High-efficiency Automatic Door

The entrance to a company is as important as the first impression of a new acquaintance. Grizzly Automatic Doors are the doors of choice in providing the very best impression to your customers.

The simple, innovative GS45A series sliding door is a high-efficiency automatic door which demonstrates the miraculous match of agility and stability.

In order to meet needs of different automatic-door markets, Grizzly GS45A series offers two specifications, **Standard type (GS45A-S)** and **European type (GS45A-E)**, which can provide different services for customers according to their needs and living environments. In addition, each type of door is produced in several models, including two operation speeds and three load capacities. For the operation speeds, **GS4545A** operates at speed 45cm/sec, whereas **GS4560A** operates at 60cm/sec; **"Light"**, **"Medium"**, and **"Heavy Load"** indicate the door weights that the models can carry.

For the door itself, customers can choose from a variety of designs in accordance with different visitor flows and various weights of doors (depending on size and materials).

Powerful Grizzly Motor

A high-performance sliding door needs an efficient motor with high torque to guarantee fast and stable opening and closing.

Grizzly has been dedicated to the development of electrical motors for decades. The motors which we produce always provide high efficiency, high torque and low cogging torque in order to maintain stable and smooth operation. Our motors have obtained patents in many countries. Such a robust core mechanism is certain to bring you the best quality of service and long-term performance.


The United States of America

The Director of the United States Patent and Trademark Office

Has received an application for a patent for a new and useful invention. The title and description of the invention are enclosed. The requirements of law have been complied with, and it has been determined that a patent on the invention shall be granted under the law.

Therefore, this

United States Patent

Grants to the person(s) having title to this patent the right to exclude others from making, using, offering for sale, or selling the invention throughout the United States of America or importing the invention into the United States of America for the term set forth below, subject to the payment of maintenance fees as provided by law.

If this application was filed prior to June 8, 1995, the term of this patent is the longer of seventeen years from the date of grant of this patent or twenty years from the earliest effective U.S. filing date of the application, subject to any statutory extension.

If this application was filed on or after June 8, 1995, the term of this patent is twenty years from the U.S. filing date, subject to any statutory extension. If the application contains a specific reference to an earlier filed application or applications under 35 U.S.C. 120, 121 or 365(c), the term of the patent is twenty years from the date on which the earliest application was filed, subject to any statutory extensions.

(USA Patent No. is US 6,404,095 B1)



Simple operation & advanced technology

- Advanced servo control system technology
- Visitor bell, reset test chime and trouble alarm
- High performance PM brushless motor with invention patent
- Durable and anti-rust stainless steel rail
- Self-cleaning brush for rail
- Self-monitoring device controlled by micro processor
- Safety sensing mechanism to stop door closing if object caught in doors

Grizzly SAFE-GLIDE™ concept

SAFE-GLIDE™ system is one of the main concepts of the Grizzly design principle. It provides the safest door operating environment, offering pedestrians the best prevention of door collision (Auto Reverse System).

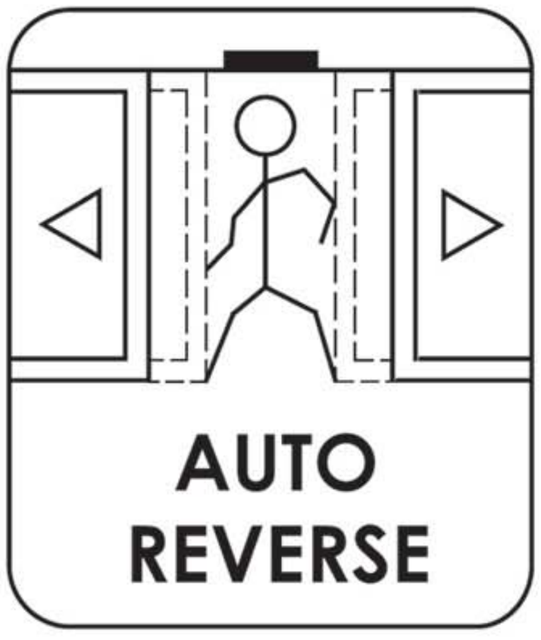

□ Full Range Reverse	□ High Sensitive Reverse
The doors will return to the open position no matter where they encounter an object (larger than the closing gap of 1.5cm/leaf), and will re-close at speed 12cm/sec/leaf after 20 seconds.	The doors will re-open when detecting low catchments force from 6 to 12 kgf at closing speed 12cm/sec. (measured by PUSH-PULL SCALE)



Grizzly Durable Stainless Steel Rail

The stainless steel rail (obtained multinational patents) is highly resistant to damage and abrasion caused by everyday use, and can withstand the heavy load of doors as well as the friction between the roller and track in long-term usage.



Grizzly Self-cleaning Mechanism

The hanger block is equipped with a plastic brush (obtained multinational patents) which cleans the rail during each opening and closing in order to keep the rail and guiding wheel free from dust and dirt. This consequently prolongs the life of the door even in the dustiest environments.

GS45A | GRIZZLY Sliding Door

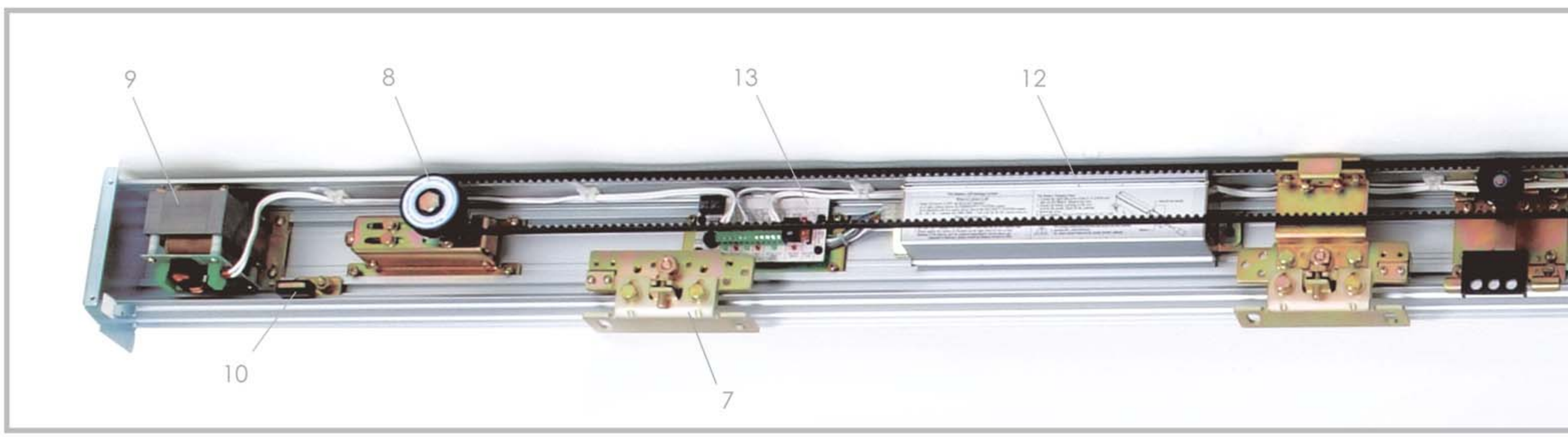







Idle Pulley Unit

The Idle Pulley Unit is designed to adjust the door movement for smooth and optimal operation. By loosening the screws, the idle pulley can be easily moved back and forward to flexibly adjust the tension of tooth belt.

Door Bell & Alarm System

The auditory signals built into the door include the visitor bell, reset test chime and trouble alarm. When the door bumps into objects, the warning alarm can bring attention to the operators.

Control Panel

The Micro Control Unit (MCU) built into the Control Panel provides automatic positioning, assuring slow movement when the door closes to a gap of precisely 5cm. The MCU also provides a clamp prevention function which can ensure the safety of pedestrians passing in and out. When the door encounters an object, the door will immediately return to the open position. In case the door sensor is out of order, the door can be pulled open by hand.

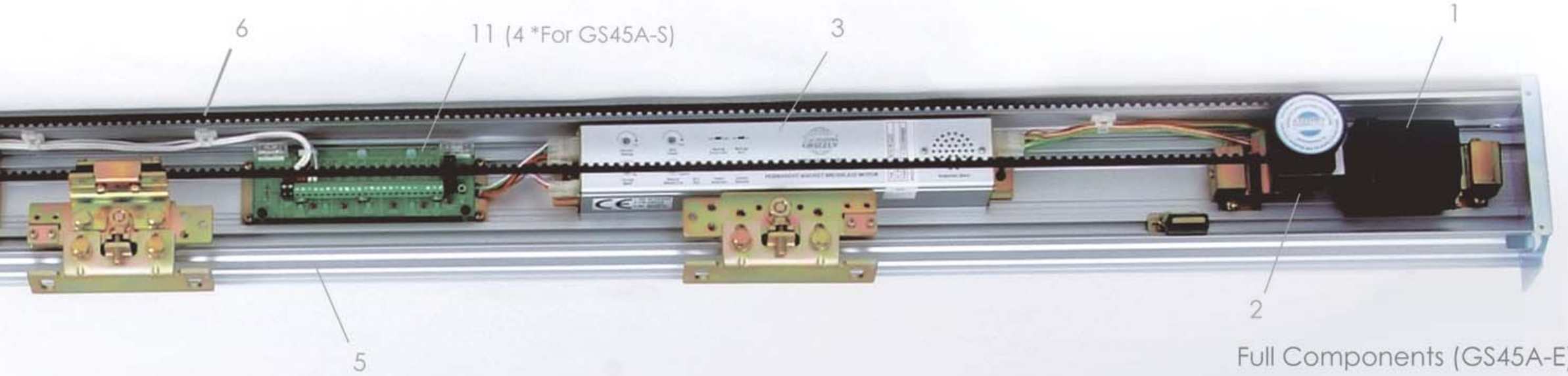

Full Components (GS45A-E)

Standard Component

1. Drive Motor
2. Gear Box
3. Control Panel
4. Sensor Terminal Unit
5. Engine Case
6. Tooth Belt
7. Hanger Block
8. Idle Pulley
9. Transformer + Terminal Unit
10. End Stop

Optional Component

11. Multifunction & Sensor Terminal Unit
12. UPS Battery Pack
13. UPS Terminal Unit







Engine Case Joining Plate

The special gutter design of the engine case mounting offers easy installation and assembly. For easy delivery, the engine case for a bi-parting door is divided into two pieces, and can be easily assembled by using the handy joining plate.

Hanger Block

The Hanger Block of the Grizzly Automatic Door System has three special features, including

(1) Double Bearing Mechanism,
(2) Adjustable Carriage Mechanism,
(3) Automatic Balance Mechanism,

offering more flexible installation and smoother movement in door operation.

Drive Mechanism

Operated by a high efficiency permanent magnet brushless motor, the drive mechanism provides fast and smooth opening and closing. The gear box with single gear is designed and manufactured under advanced technology to ensure direct power transfer and to reduce the running noise.
The gear box itself, made of medium-carbon steel with heat treatment, is capable of withstanding the high torque in startup, which provides long durability in operation.

Advanced Technology & Advantages With Peculiar Design

Grizzly Closed Loop Servo Control System

The Grizzly Closed Loop Servo Control System has high sensitivity which can detect minute changes occurring in the operation and provide adequate feedback control: For example, with a strong wind, the air pressure will slow down the door's moving speed; at this moment, the Closed Loop Servo Control System will transmit a signal to slightly increase the motor power in order to maintain the prefixed operating speed.

Repeated operation of the door could cause temperature rise and damper decrease in the motor, which could potentially cause the system to loose control of the closing speed of the door. Through the Closed Loop Servo Control System, however, the door can monitor the speed of the motor to ensure the stable operation of the doors, avoiding any possible defective situation and door collision.

◎ **Traditional open loop system**
(semi-computerized control)

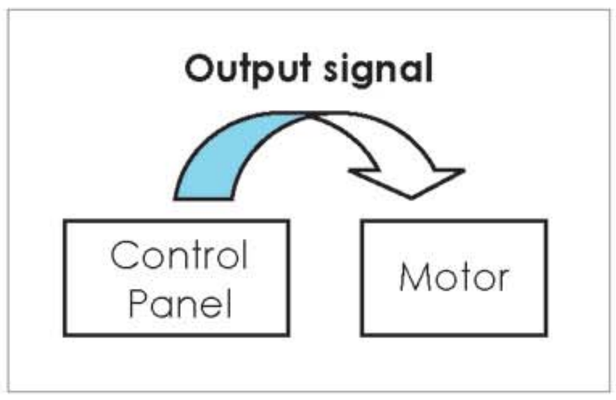

◎ **Brand new closed loop servo control system**
(fully computerized control)

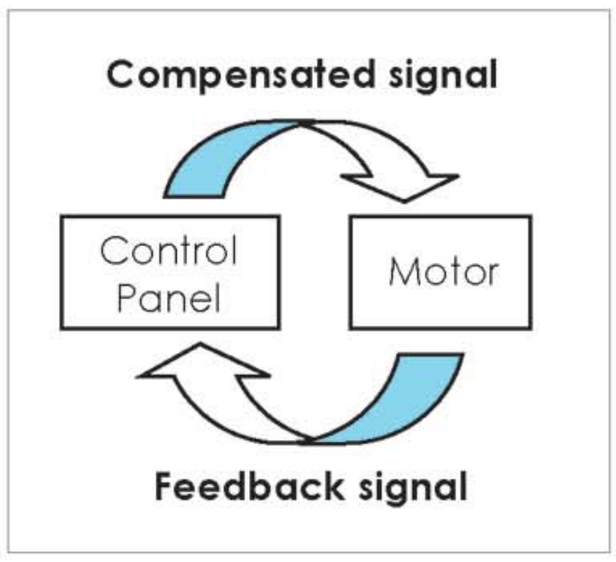

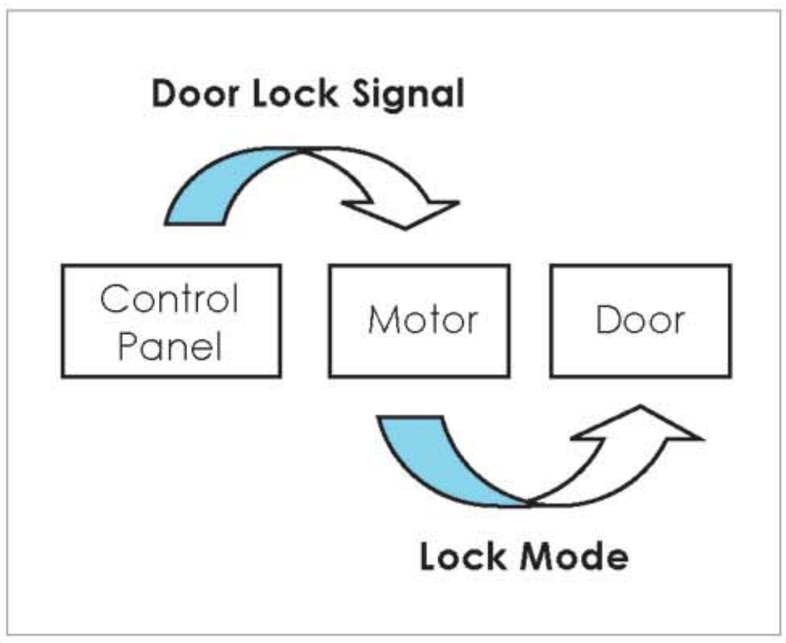

Electronic Motor-Lock

Electronic Motor-Lock (optional) is directly driven by the control panel, to lock the door when desired. Unlike the traditional mechanical lock, the electronic motor-lock can avoid noise when the door is locked as well as mechanical abrasion from frequent operation in daily use, providing a durable and reliable security system for automatic doors.

Special Features of the Hanger Block

Double bearing mechanism

The Hanger Block with twin rollers is capable of reducing the bearing friction and loading in door movement. In case the door is bumped, each roller has two bearings to withstand lateral pressure, keeping the door in normal operation.

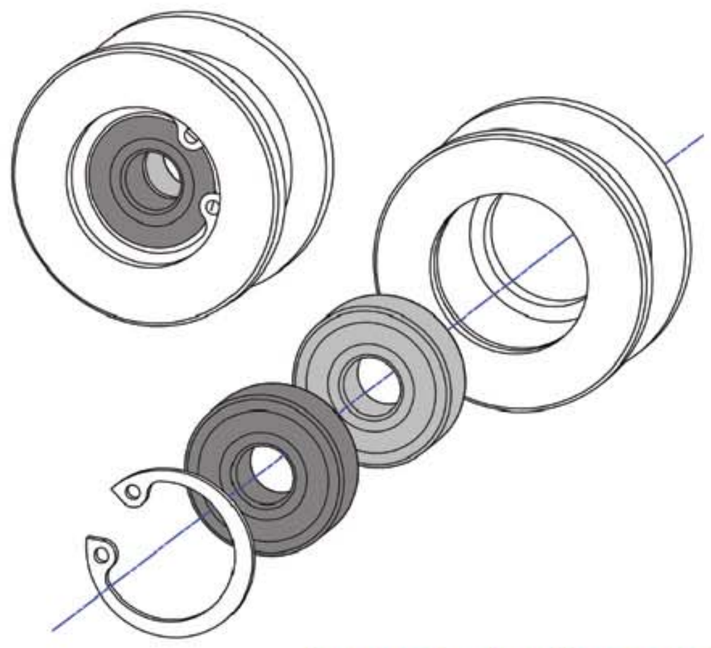

Each roller has two bearings

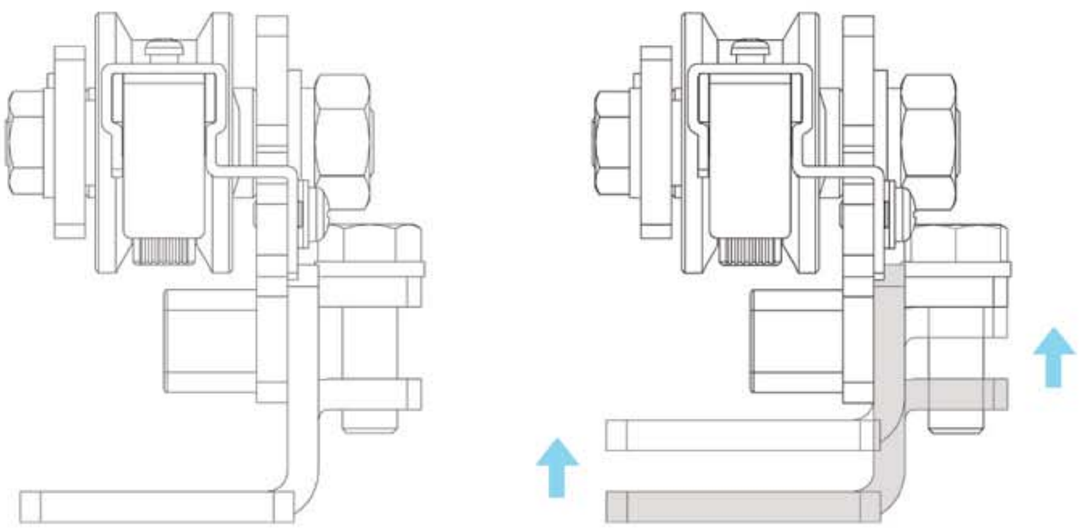

Adjustable carriage mechanism

The hanger block is designed in two parts that can be flexibly raised a few centimeters in order to adjust the door height. By unscrewing the two screws of each carriage, the door is allowed to easily slide upwards and downwards to adjust its height to fit the installation environment. For a bi-parting door system, furthermore, the mechanism can adjust the gap between doors by simply aligning the carriage to ensure the perfect fitting of the two frames.

Automatic Balance Mechanism

The seesaw roller, on the back of the hanger, can immediately self-adjust to maintain balance in door operation. One of the rollers is always assured of attachment to the track to prevent the door from derailing.

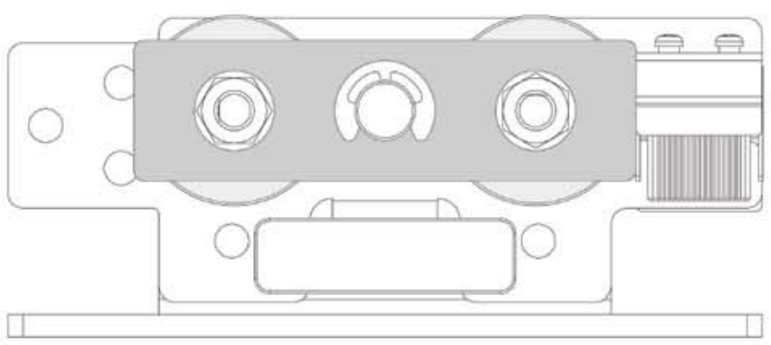

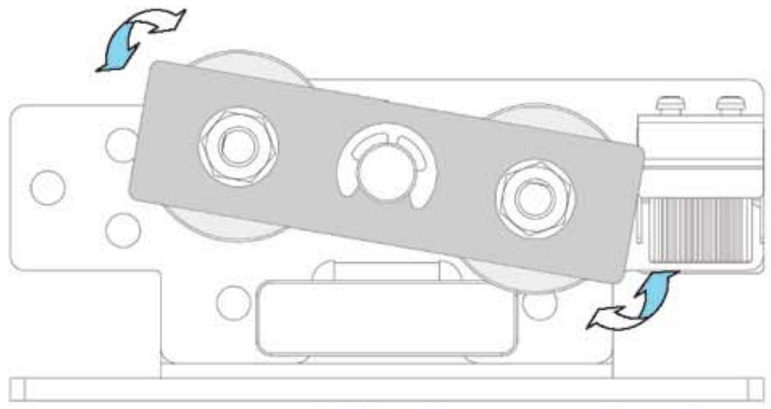

Self-balance mechanism

Specifications

Standard Version

GRIZZLY
GS 45A-S SERIES

GS 4545 A L - S S AC-24V 1 2 3 4 5 6 7	1. Type : (GS=Sliding) 2. Series : (45、60、80Series) 3.Speed: (45、60、80、100 cm/sec) 4. Weight : (Light , Middle , Heavy) 5. Structure : (S=Surface ,C=Concealed) 6. Door : (S=Single ,B=Bi-parting) 7. Power Supply : (AC24V, AC110V, AC220V)					
Model	GS 4545A L	GS 4545A M	GS 4545A H	GS 4560A L	GS 4560A M	GS 4560A H
Engine case structure	Aluminum case + Durable stainless rail					
Opening speed	45cm/sec/leaf			60cm/sec/leaf		
Closing speed	12~45cm/sec/leaf (adjustable)			12~60cm/sec/leaf (adjustable)		
Slow speed	3~6 cm/sec/leaf (adjustable)					
Driving belt	Timing-belt : S8M-10mm Width					
Controller & Driving block	Digital MCU Servo Control & Permanent Magnet Brushless Motor directly drives the single-gear box.					
Motor power – Rating power	30Watt	45Watt	60Watt	45Watt	60Watt	80Watt
Motor power – Starting power	120Watt	180Watt	240Watt	180Watt	240Watt	320Watt
Weight – Single	90kg (120*kg)	120kg (150*kg)	150kg (200*kg)	90kg (120*kg)	120kg (150*kg)	150kg (200*kg)
Weight – Bi-parting	60kg×2 (75*kg × 2)	90kg×2 (120*kg × 2)	120kg×2 (150*kg×2)	60kg×2 (75*kg × 2)	90kg×2 (120*kg × 2)	120kg×2 (150*kg× 2)
Door width	> 50 cm/leaf			> 60 cm/leaf		
Hanger roller	2 Wheels (Ø38 Engineering plastic) with auto-balance and self-cleaning mechanism					
Hold opening time	0.5 ~ 20 sec (adjustable)					
Manual opening force	1. Auto ≒ 7kgf (Door pressed by force) 2. Auto-lock ≒ 15kgf (Door pressed by stronger force)					
Temperature range	-20˚~ + 60˚C					
Hanger Extended rod	N/A					
SAFE GLIDE – Full Range Reverse	Operates when the gap of the closing door is > 1.5cm					
SAFE GLIDE – High Sensitive Reverse	Catchments force: 6~12kg measured by Push-Pull Scale at 12cm/sec closing speed (adjustable)					
Optional function	1. Terminal unit (45- S)	U.P.S. signal, Auto-lock, Open Switch, Door Sensors, Lock Control				
	2. Function Key Switch : Open. Auto. Exit. Close., 3. Function Rotary Switch: Open. Auto. Exit. Close.					
	4. Battery pack (U.P.S.) 5. Electronic Motor-Lock					

* Should the door overload, the speed will be 1/5 slower than the normal one.

European Version

GRIZZLY
GS 45A-E SERIES

GS 4545 A L - S S AC-24V 1 2 3 4 5 6 7	1. Type : (GS=Sliding) 2. Series : (45、60、80Series) 3.Speed: (45、60、80、100 cm/sec) 4. Weight : (Light , Middle , Heavy) 5. Structure : (S=Surface ,C=Concealed) 6. Door : (S=Single ,B=Bi-parting) 7. Power Supply : (AC24V, AC110V, AC220V)					
Model	GS 4545A L	GS 4545A M	GS 4545A H	GS 4560A L	GS 4560A M	GS 4560A H
Engine case structure	Aluminum case + Durable stainless rail					
Opening speed	45cm/sec/leaf			60cm/sec/leaf		
Closing speed	12~45cm/sec/leaf (adjustable)			12~60cm/sec/leaf (adjustable)		
Slow speed	3~6 cm/sec/leaf (adjustable)					
Driving belt	Timing-belt : S8M-10mm Width					
Controller & Driving block	Digital MCU Servo Control & Permanent Magnet Brushless Motor directly drives the single-gear box.					
Motor power – Rating power	30Watt	45Watt	60Watt	45Watt	60Watt	80Watt
Motor power – Starting power	120Watt	180Watt	240Watt	180Watt	240Watt	320Watt
Weight – Single	90kg (120*kg)	120kg (150*kg)	150kg (200*kg)	90kg (120*kg)	120kg (150*kg)	150kg (200*kg)
Weight – Bi-parting	60kg×2 (75*kg × 2)	90kg×2 (120*kg × 2)	120kg×2 (150*kg×2)	60kg×2 (75*kg × 2)	90kg×2 (120*kg × 2)	120kg×2 (150*kg× 2)
Door width	> 50 cm/leaf			> 60 cm/leaf		
Hanger roller	2 Wheels (Ø38 Engineering plastic) with auto-balance and self-cleaning mechanism					
Hold opening time	0.5 ~ 20 sec (adjustable)					
Manual opening force	1. Auto ≒ 7kgf (Door pressed by force) 2. Auto-lock ≒ 15kgf (Door pressed by stronger force)					
Temperature range	-20˚~ + 60˚C					
Hanger Extended rod	N/A					
SAFE GLIDE – Full Range Reverse	Operates when the gap of the closing door is > 1.5cm					
SAFE GLIDE – High Sensitive Reverse	Catchments force: 6~12kg measured by Push-Pull Scale at 12cm/sec closing speed (adjustable)					
Optional Function	1. Terminal unit (45- E)	U.P.S. signal, Auto-lock, Open Switch, Inter-lock , Close Mode and Lock, Door Sensors, Reset and Motor-lock signal				
	2. Function Key Switch: Open. Partial. Auto. Exit. Close.					
	3. Function Rotary Switch: Open. Partial. Auto. Exit. Close., 4. Battery pack (U.P.S.) 5. Mechanical E-lock					

* Should the door overload, the speed will be 1/5 slower than the normal one.

Profile

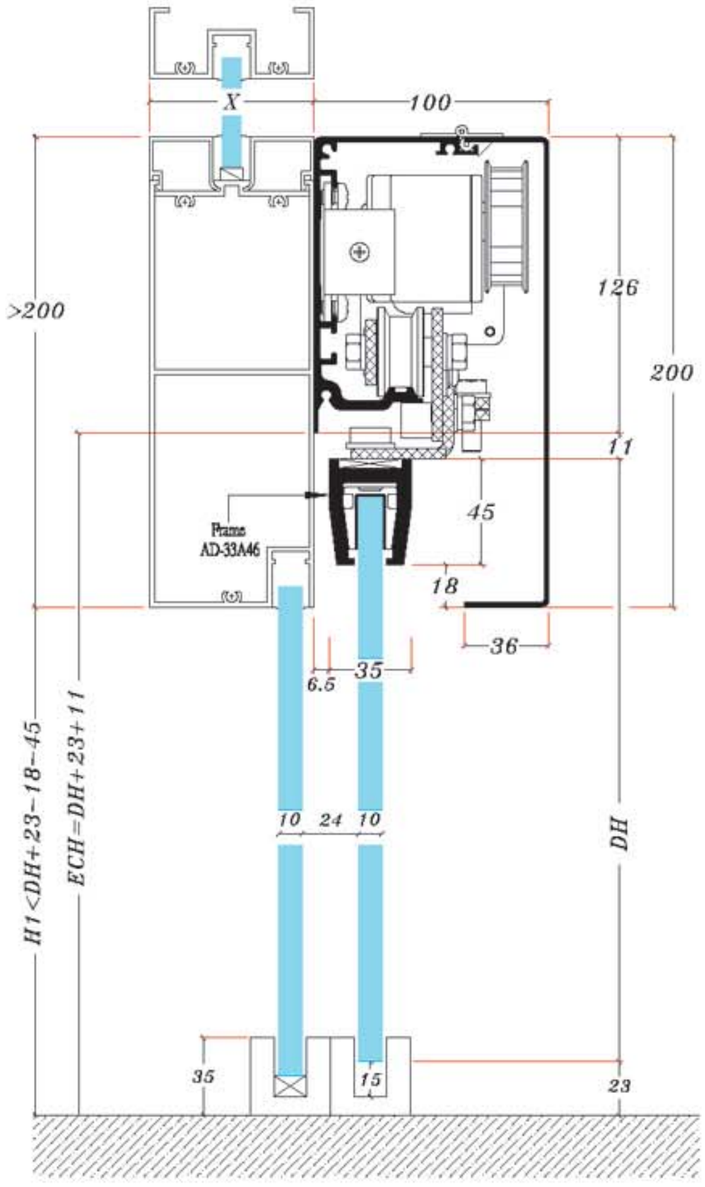

Surface-mounted Frameless Glass

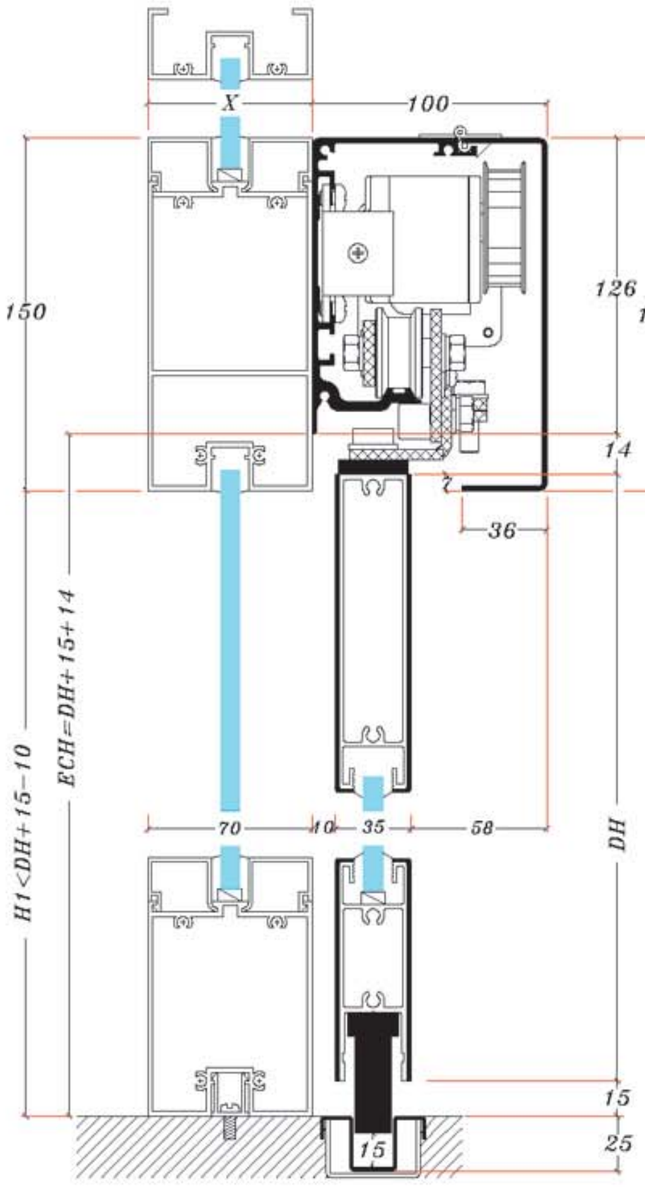

Surface-mounted (Stainless Steel Frame)

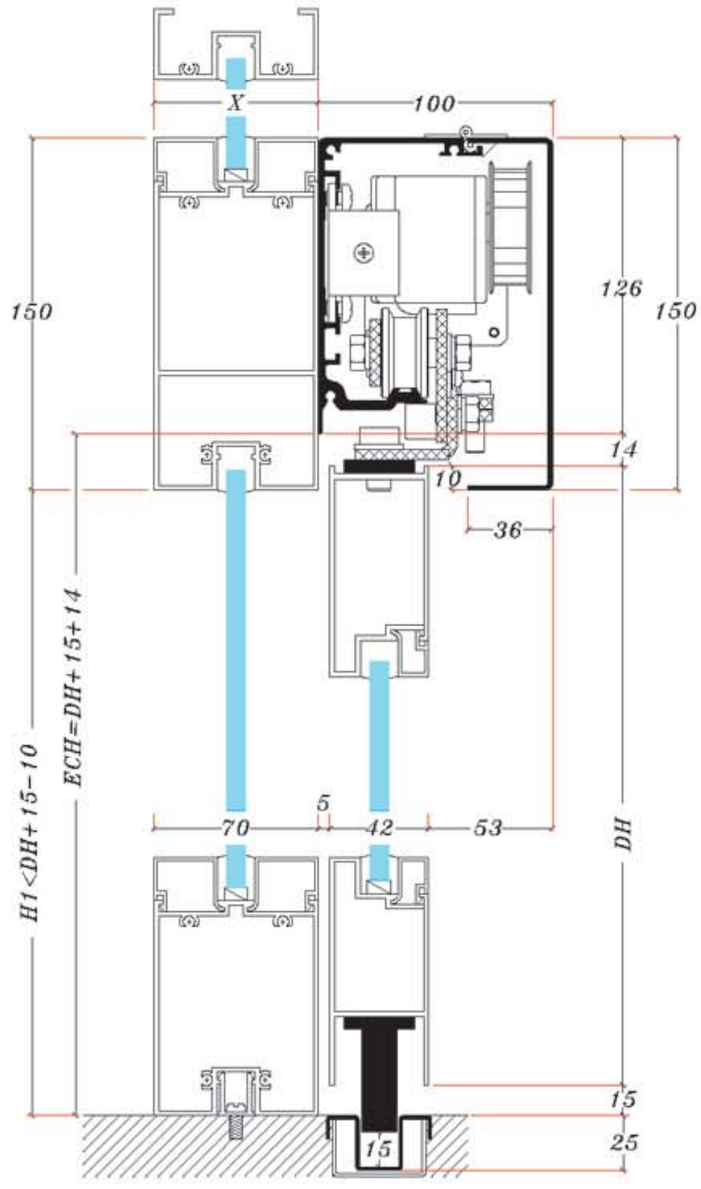

Surface-mounted (Aluminum Frame)

■ Engine Case (Aluminum) Cover (Aluminum)

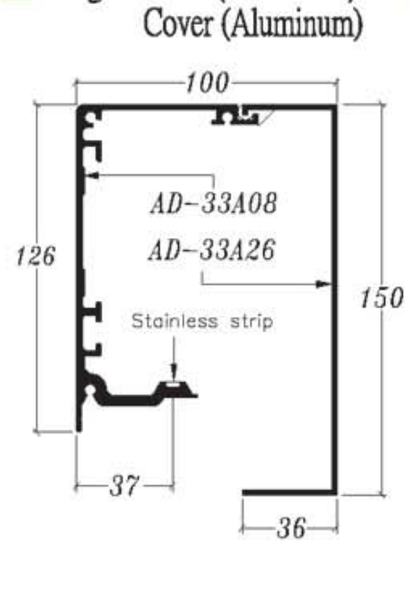

■ Engine Case (Aluminum) Cover (Stainless steel)

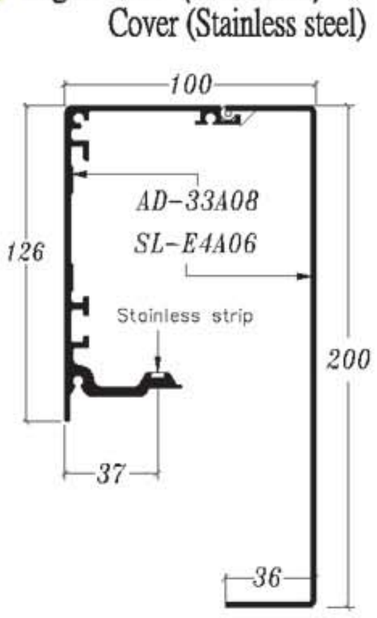

■ Components in Auto-door Installation

(Unit : mm)

Unit	No.	Length		
Surface-mounted Engine Case	AD-33A08	2100	2500	3200
Surface-mounted Engine Cover	AD-33A26	2105	2505	3205
Frameless Glass Engine Cover	AD-33A45	2105	2505	3205
10 mm Glass Frame	AD-33A46-10	1050	1250	1600
12 mm Glass Frame	AD-33A46-12	1050	1250	1600

Accessories

Function Key Switch (actived by key)

For **GS45A-Standard Type**:
Open, Auto, Exit, Close (4 sections)



For **GS45A-European Type**:
Open, Partial, Auto, Exit, Close (5 sections)



Terminal Unit

For **GS45A-Standard Type**:
U.P.S. signal, Auto-lock, Open Switch, Door Sensors, Lock Control (Signal interface for Control Panel)

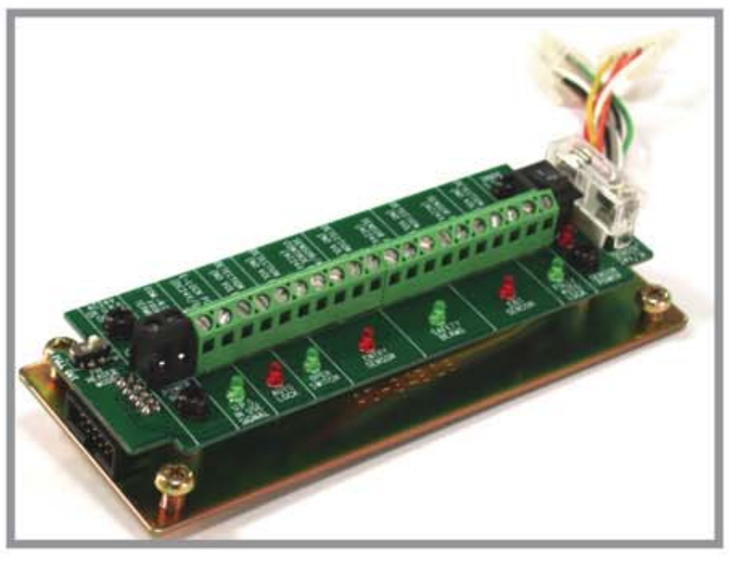

For **GS45A-European Type**:
U.P.S. signal, Open Switch, Auto-lock, Inter-lock, Close Mode and Lock, Door Sensors, Reset and Motor-lock signal (Signal interface for Control Panel)

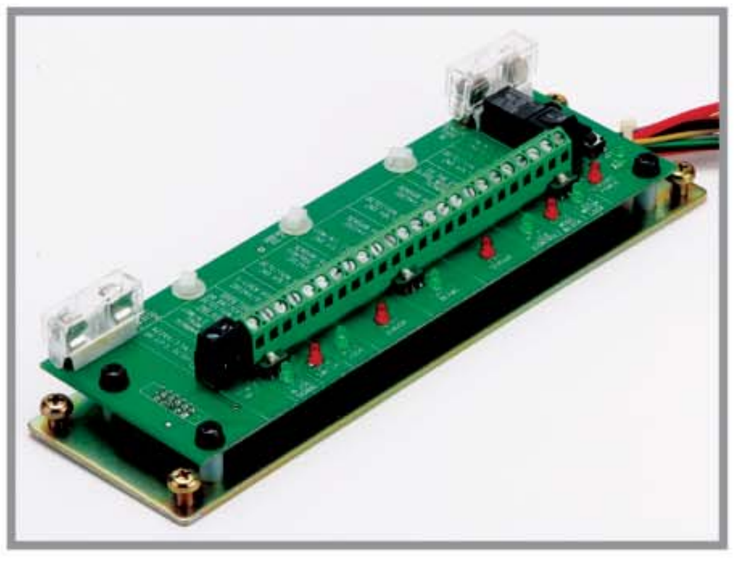

Electronic Motor-Lock

Optional for **GS45A-Standard Type** (substitute E-lock)

Built in **GS45A-European Type**

Battery Pack (U.P.S.)

The Micro processor will check the battery status within 30 seconds every 3.5 hours, and is able to supply at least 20 minutes power during electricity failure.

1. Emergency Mode:

Offering power to open the door automatically at low speed in any emergency situation

2. Security Mode:

Offering power but will not automatically open the door unless receiving an open signal

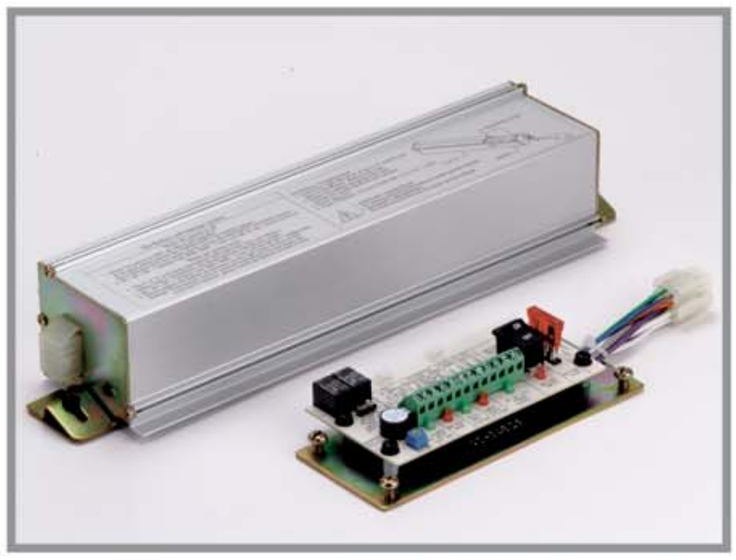

Sensor



EAGLE SIX

High performance universal opening for all automatic doors



MICROCELL

Safety for automatic doors

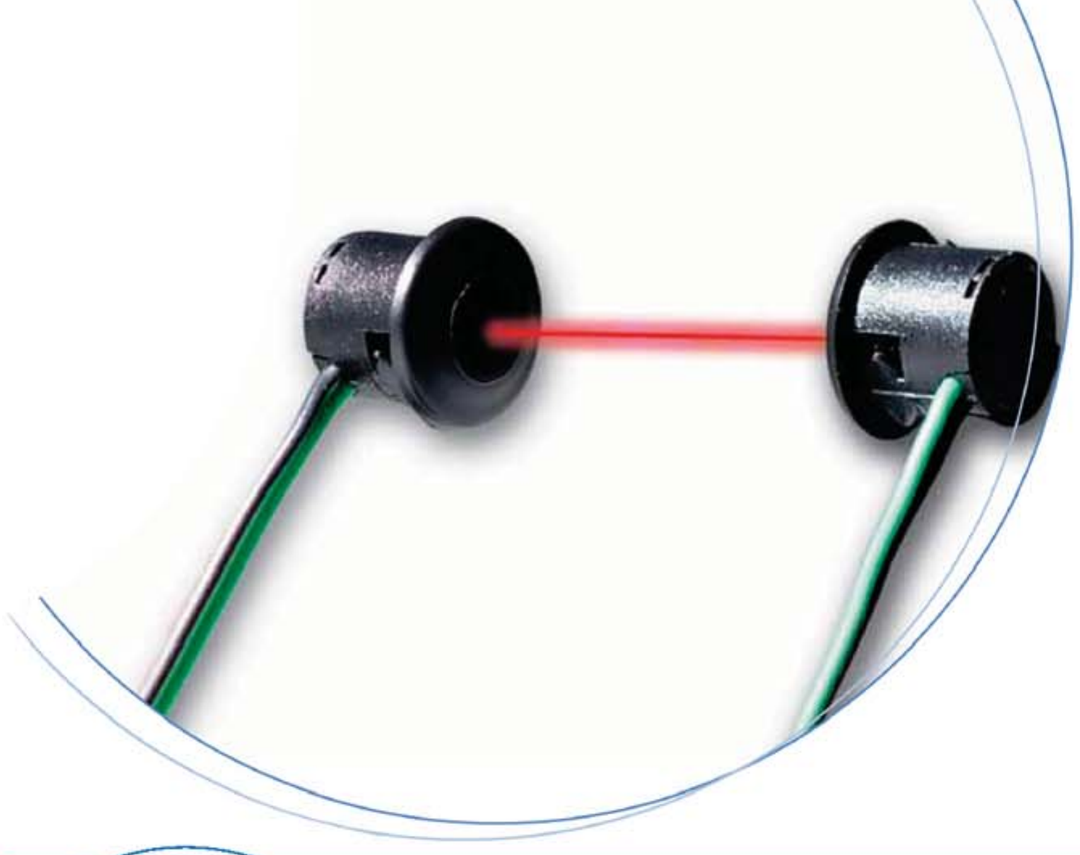

Microwave sensor

Digital motion sensor: the most economical all-round solution for opening of all types of automatic doors (sliding, swinging, revolving, curved...). The sensor adapts itself to every application without the need for additional accessories.

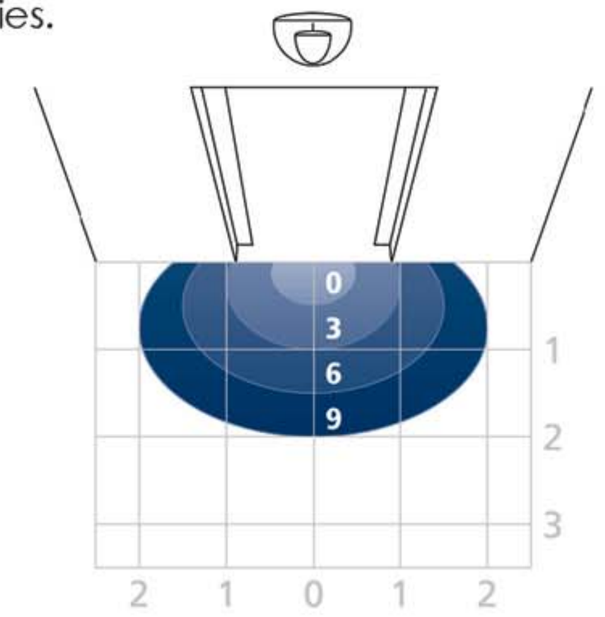

Sensing fields in accordance with sensitivity setting
mounting height : 2.2 m

Sensing fields

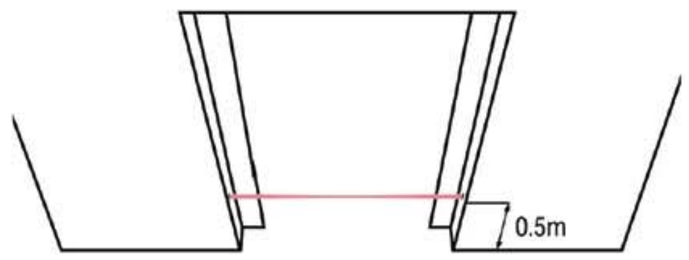

Single beam

Infrared barrier & safety sensor

The small-sized infrared beams can be discreetly fitted into the profiles of single or double doors and can also be used for specific applications (railways, security entrances, etc.).
Microcell One : barrier composed of plug-in cylindrical heads with a 5 m cable and a control box with one relay.

H-941

Unit: mm

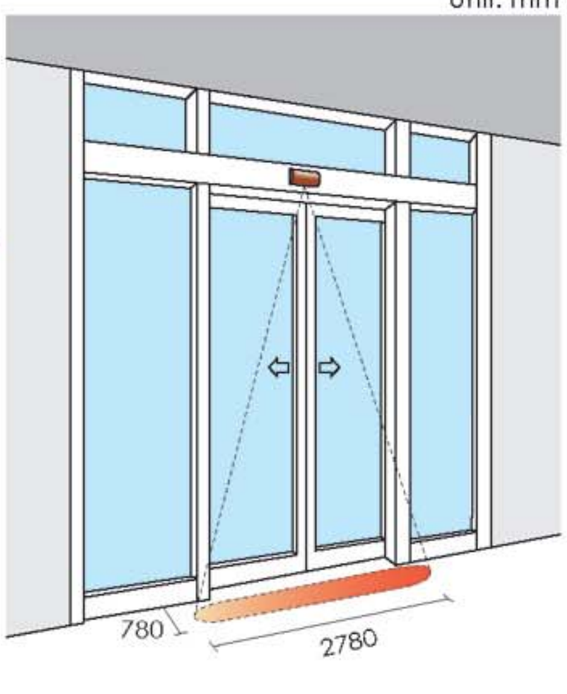

H-942

Unit: mm

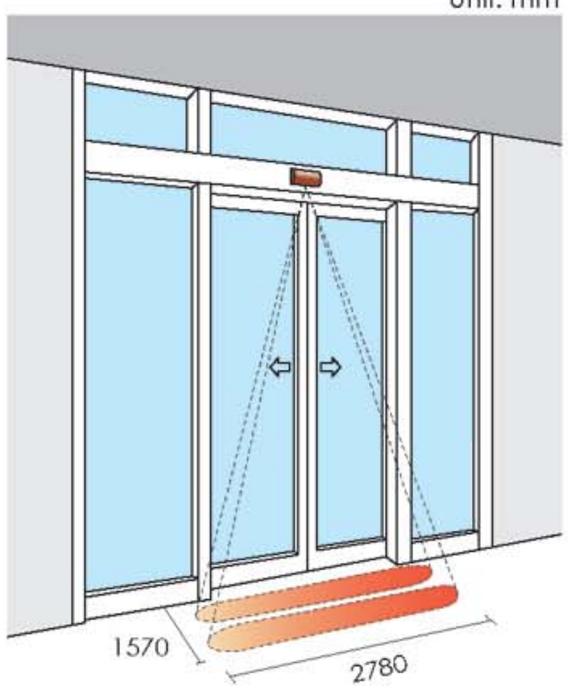



Active Infrared Motion & Presence Detection

A precise, simple and economical automatic door activation sensor. The detecting area is divided into one (H-941) or two (H-942) lines of eight beams per line, giving a high-density detection pattern.

* Actual figures are based on real product specifications

Contact

Head Office

Eledyna Technology Corporation

790 West 68th Avenue
Vancouver B.C V6P 2T9 CANADA

Factory

Grizzly Electrodynamic Coporation

No. 19, Wu-Quan 6th Road,
Wu-gu Industrial Estate,
Taipei County, Taiwan (R.O.C.)

Marketing Department

Tel: 886-2-2980097
Fax: 886-2-33983115
E-mail: service@grizzly-ad.com
sales3@grizzly-ad.com
Website: www.grizzly-ad.com

Our staffs speak English, Spanish, French, and German ! Don't hesitate to call us directly !

Distributor

CE

ELEDYNA™
GRIZZLY